07790

EXTRA TALL TOP OF STAIRS GATE WITH BANISTER KIT

INSTRUCTION MANUAL

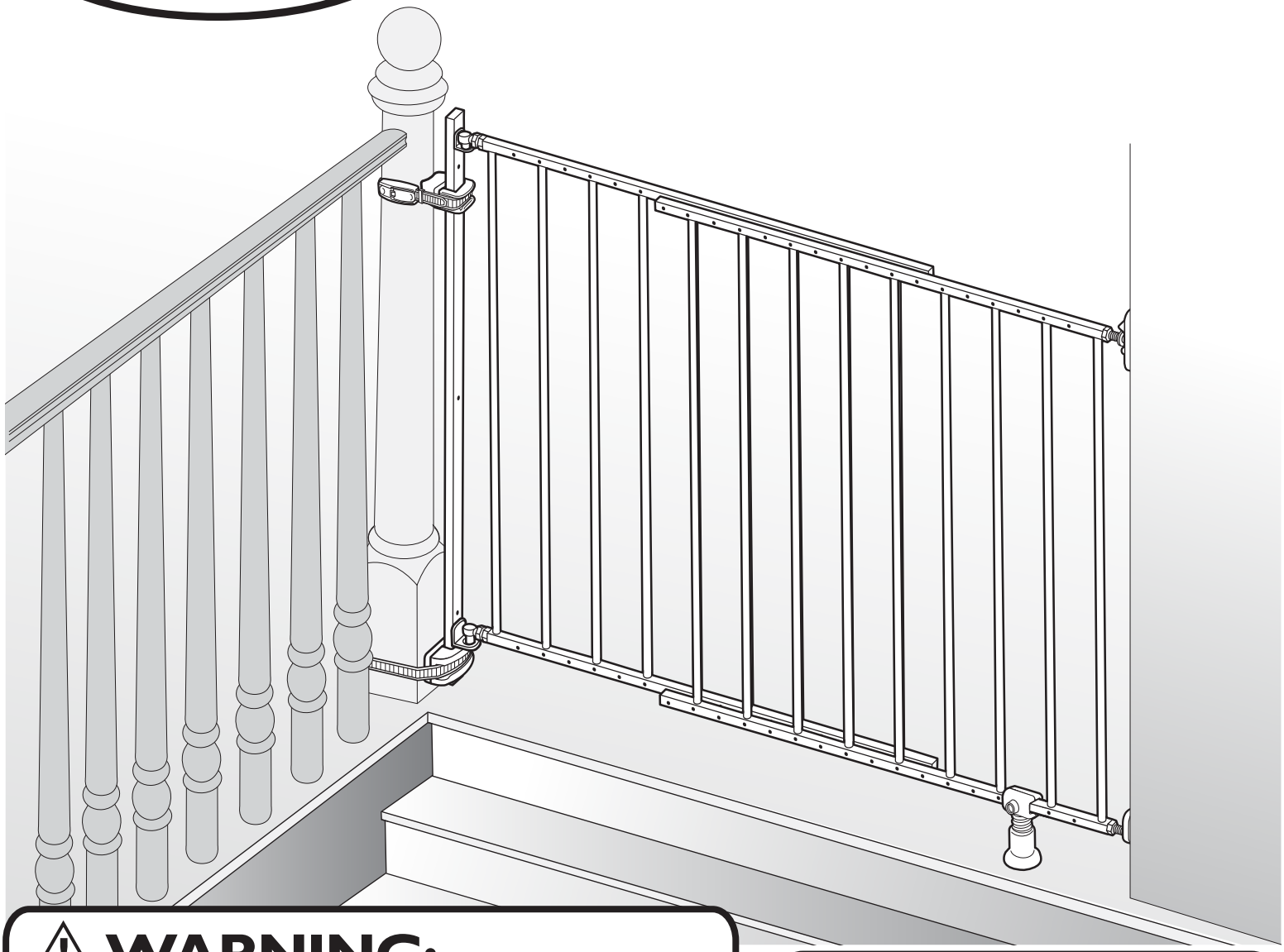

⚠ WARNING:

- To prevent serious injury or death, securely install gate and use according to manufacturer's instructions.
- Never use with child able to climb over or dislodge the gate.
- Never leave child unattended.
- Use only with lock securely engaged.
- Always close gate behind you.
- Do not use if any components are missing or damaged.
- Check daily that the banister bracket is securely attached and gate is securely anchored to banister and wall.
- Do not mount to spindles less than 2" in diameter.
- This product will not necessarily prevent all accidents. Proper adult supervision is required at all times.
- Adult assembly required. Exercise care when unpacking and assembling product.

IMPORTANT! KEEP FOR FUTURE REFERENCE!

Please read the following instructions and warnings carefully.

For technical support call 1-800-268-6237 or e-mail at customerservice@summerinfant.com

For use with children from 6 - 24 months.

Keep small parts away from children.

Please retain information for future reference.
Colors and styles may vary.

MADE IN CHINA.

© 2008 Summer Infant, Inc.

Summer Infant, Inc.
1275 Park East Drive
Woonsocket, RI 02895 USA
1-800-268-6237

Summer Infant Europe, Ltd.
Office Suite 6, Second Floor
Bournehall House, Bournehall Road
Bushey, Hertfordshire WD23 3HP
+44 (0) 208 420 4429

10/09

Parts

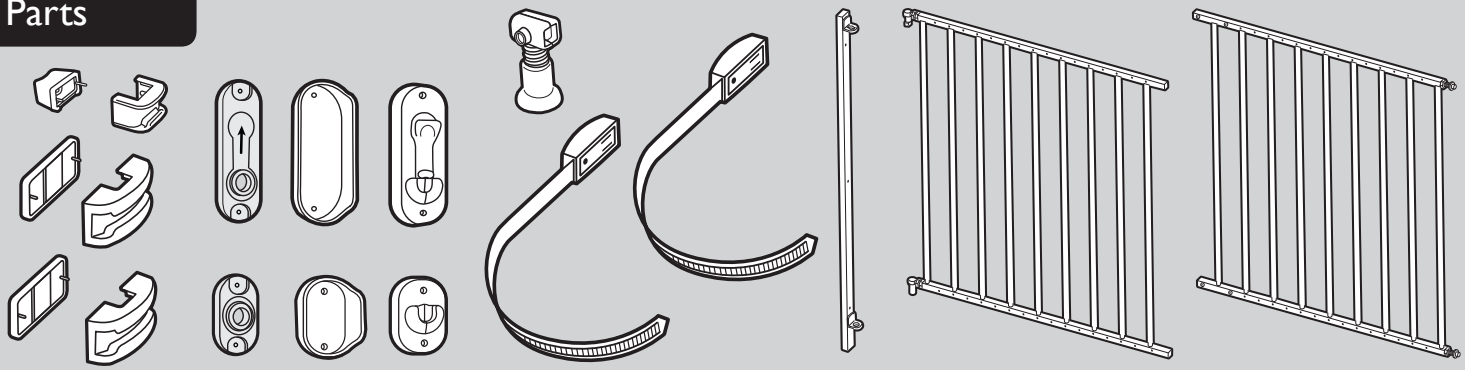

Hardware

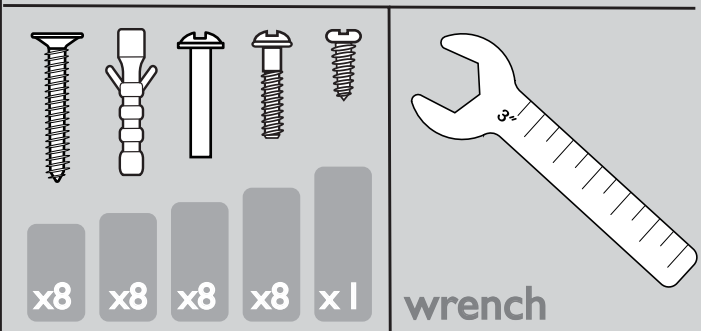

Tools required (not included): Drill with 7/32 drill bit, two Phillips Head screwdrivers.

Maintenance

1. Regularly check spindle lock nuts and banister bracket assembly to ensure the gate is securely in place.
2. Do not use gate if any components are damaged or missing.
3. Wipe surface with a damp cloth or sponge using mild detergent and warm water.

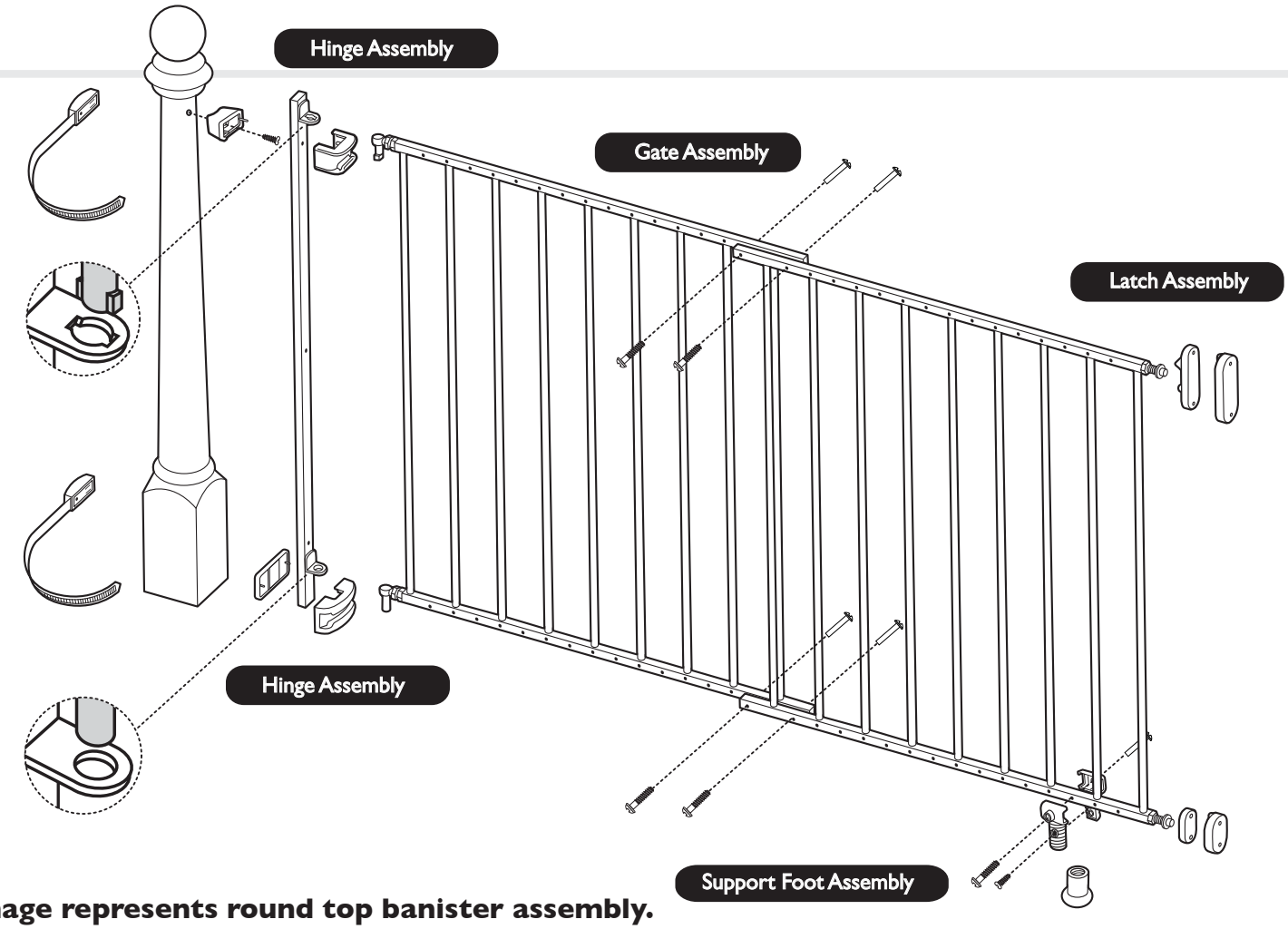

Image represents round top banister assembly.

I. Hinge Assembly

CHOOSE WHICH OF THE THREE OPTIONS WITHIN THE HINGE ASSEMBLY SECTION BEST FITS YOUR NEEDS.

Option A:

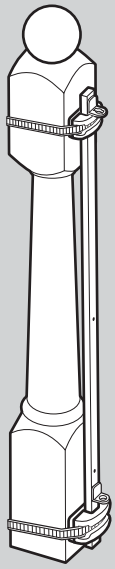

Square Top Banister (No drilling necessary)

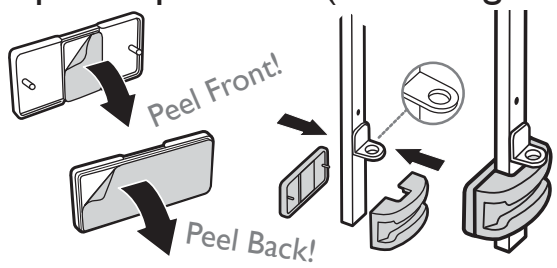

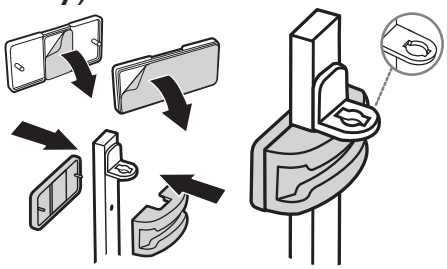

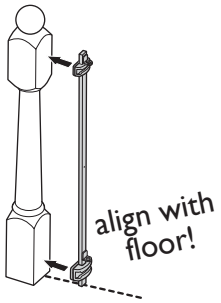

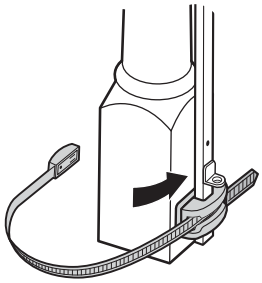

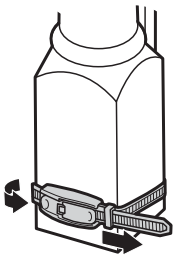

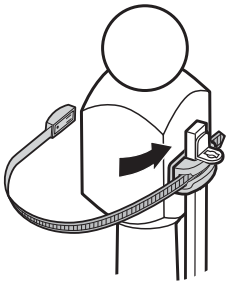

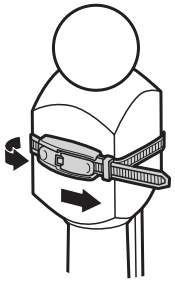

to tighten

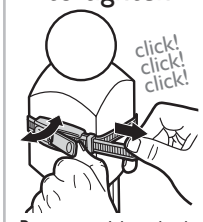

Be sure to tighten both top and bottom bracket!
DO NOT OVER TIGHTEN!

to release

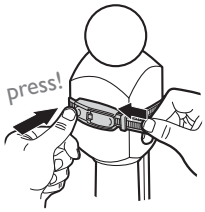

Option B:

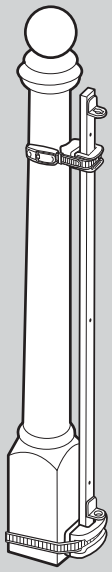

Round Top Banister (Drilling necessary)

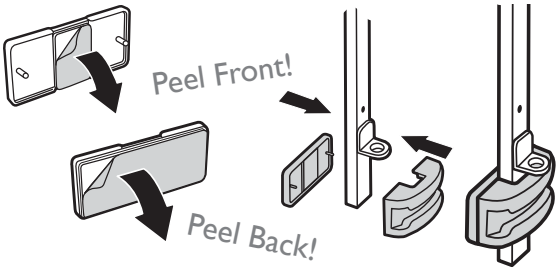

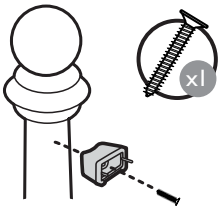

Pre-drill a hole using a 1/8" or 3mm through center hole of Spindle Assembly back into spindle.

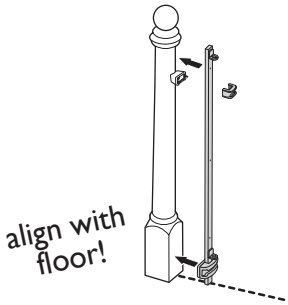

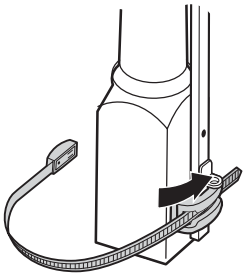

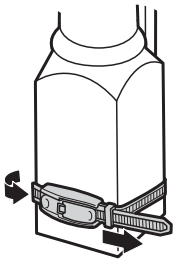

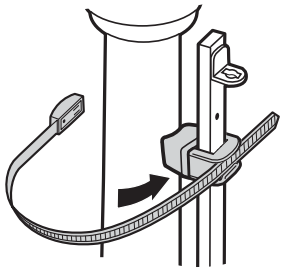

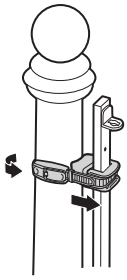

to tighten

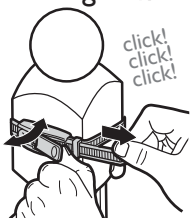

Be sure to tighten both top and bottom bracket!
DO NOT OVER TIGHTEN!

to release

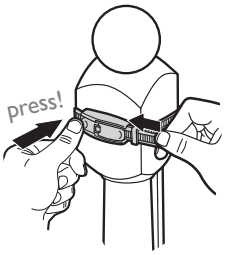

Option C:

Wall Mount

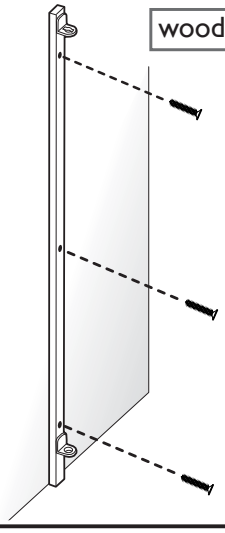

wood wall ! or wallboard !

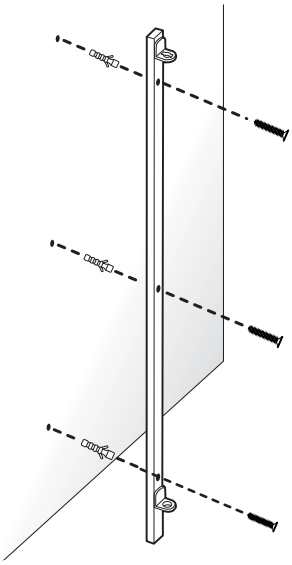

Pre drill holes using 7/32" (5.5mm) drill bit. Use pre-existing holes in your banister bracket as your guide. Insert Wall Anchors into the hole with a hammer, tap gently on end until the Wall Anchor is flush with the wall.

wall mounting fits openings 30" to 54" !

2. Gate Assembly

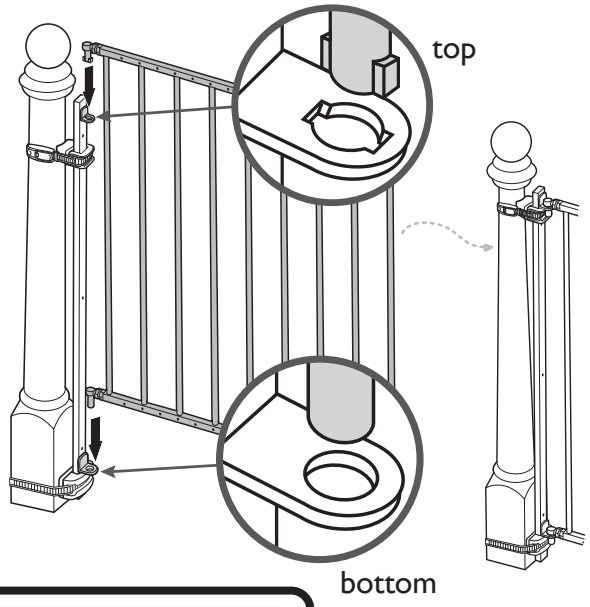

Adjust gate panel to fit desired opening!

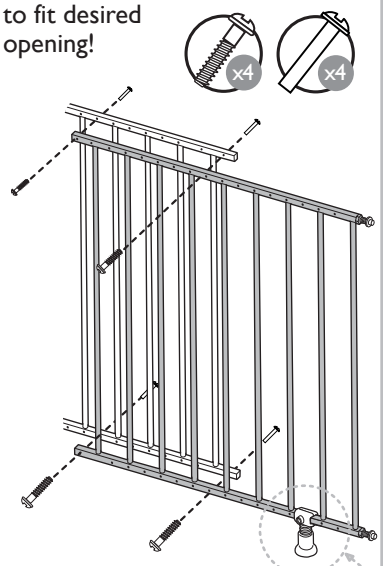

Support Foot Assembly:

Only for openings larger than 40".

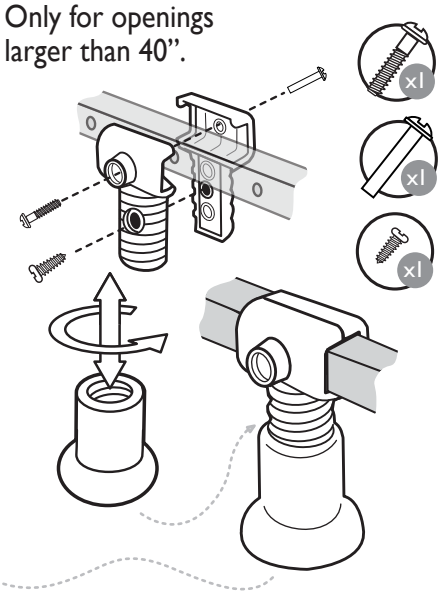

3. Latch Assembly

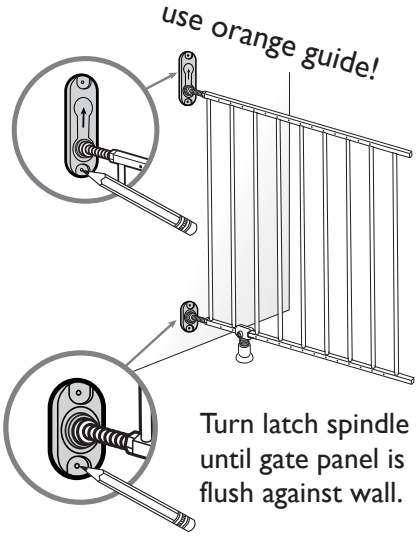

Turn latch spindle until gate panel is flush against wall.

remove guides after marking with pencil

IMPORTANT NOTE: when mounting into any hardwood (molding), a pre-drilled hole is required. Pre-drill a hole in the hardwood, using an 1/8' or 3mm drill bit approximately 1 inch deep.

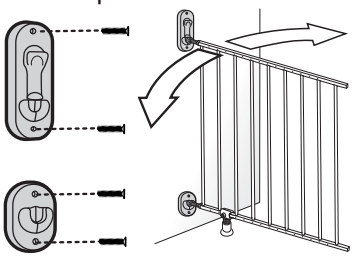

⚠SAFETY WARNING: If installing gate at top of stairs, DO NOT mount into wallboard.

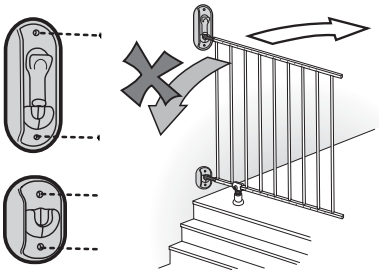

IMPORTANT NOTE: If installing at top of stairs, wall cup installation is needed (see images to left). Flanged side of wall cups must face stairs.

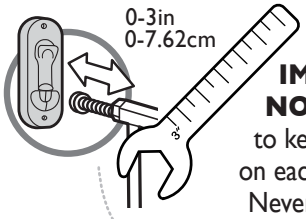

IMPORTANT NOTE: Be certain to keep equal spacing on each side of the gate. Never exceed 3" for a gap on either side or bottom.

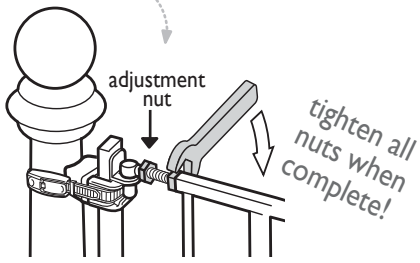

IMPORTANT NOTE: Gate can be horizontally leveled by rotating upper or lower adjustment nut (in or out) with supplied Wrench.

Operating Instructions

OPENING THE GATE:

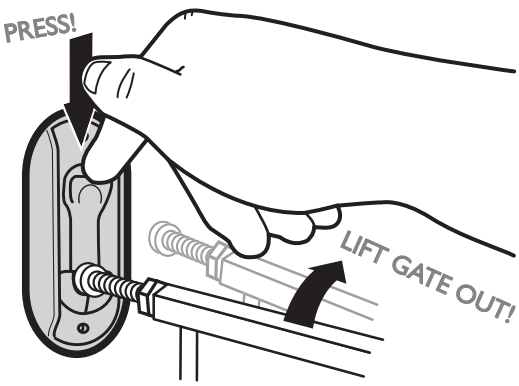

CLOSING THE GATE:

Simply swing the gate shut until upper and lower spindles are inside top and bottom latches. ALWAYS check that the latch is securely fastened and that all connections are also securely fastened.
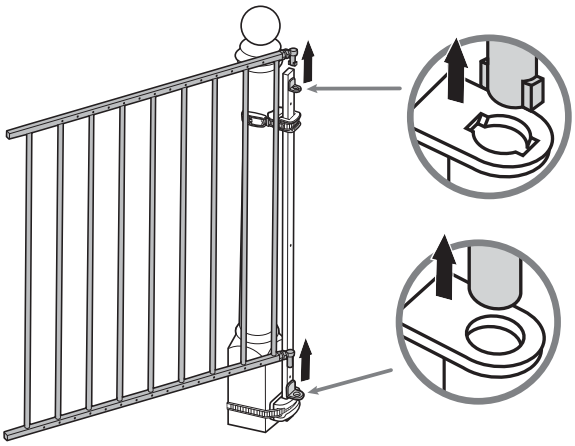
REMOVING THE GATE: